Operation and Maintenance Manual

*Model 111 Standard "Scintillator"**
*Model 111B De Luxe "Scintillator"**
*Model 111C Custom "Scintillator"**
*Model 117B Special "Scintillator"**

*Reg. U.S. Pat. Off.

QUALITY INSTRUMENTS

PRECISION RADIATION INSTRUMENTS, INC.
Los Angeles 16, California
World's Largest Manufacturer of Radiation Instruments

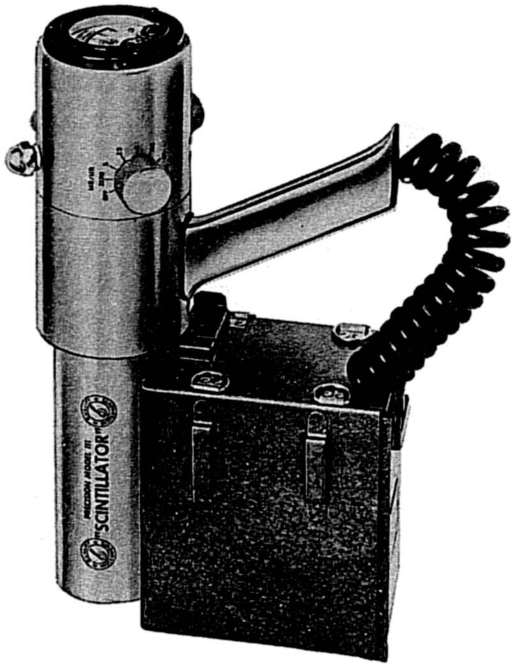

Model 111 Standard "Scintillator"

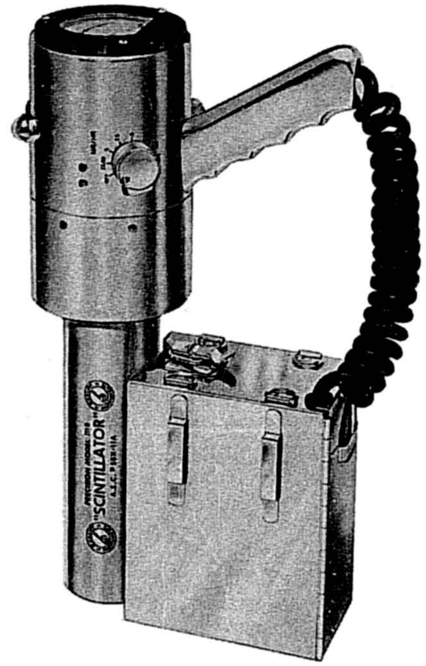

Model 111B DeLuxe "Scintillator"

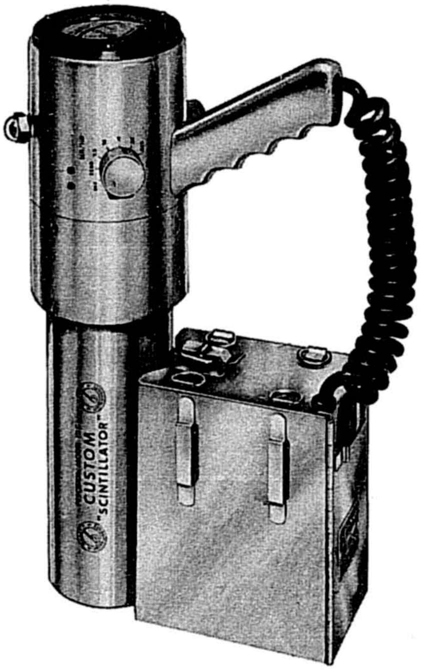

Model 111C Custom "Scintillator"

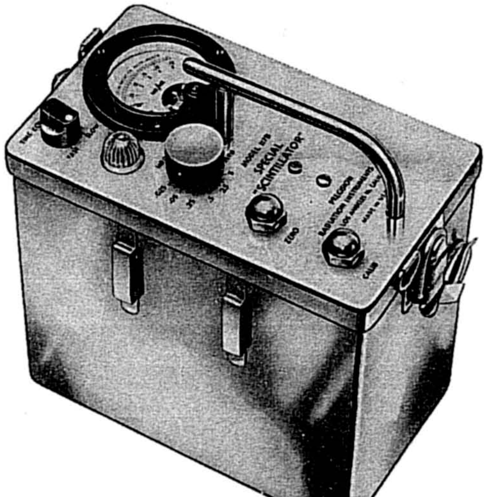

Model 117B Special "Scintillator"

TABLE OF CONTENTS

Precision Radiation Instruments, Inc.

INSTRUCTION AND MAINTENANCE MANUAL

MODEL 111 STANDARD "SCINTILLATOR"*
MODEL 111B DE LUXE "SCINTILLATOR"*
MODEL 111C CUSTOM "SCINTILLATOR"*
MODEL 117B SPECIAL "SCINTILLATOR"*

I. Advantages of Scintillation Counting

The presence of gamma radiation can be determined by taking a reading with a Geiger Counter or a Scintillation Counter. The two types of instruments are used in a similar manner. The major difference between them lies in the detecting element. The Geiger Counter uses a Geiger-Mueller tube which is filled with a gas, whereas the Scintillation Counter uses a Sodium Iodide crystal, which is very dense, as its detecting element. The crystal, if of sufficient volume, responds to practically every gamma ray that strikes it, whereas the Geiger tube reacts to less than 1% of the gamma rays that penetrate it. As a result, the Scintillation Counter registers many times the number of rays that the Geiger Counter can from the same source. This makes the Scintillator a more sensitive instrument than a Geiger Counter. Another important result is that a steadier meter reading for a given field of radiation is obtained, because the Scintillator is averaging many times the number of counts per time interval, compared to the Geiger Counter. This effect is particularly important when measuring low levels of radiation. As a result, a small difference in average intensity can be detected with ease on the Scintillator when the same difference would not be recognizable on a Geiger Counter, due to its erratic meter movement. This is the factor that makes the "Scintillator" so valuable for uses such as prospecting where a small indication is often significant.

II. General Description

The Model 111 Series Scintillators consist of two separate parts, which are connected by a cable. One portion of the instrument, the "probe," contains most of the electronic components and the detecting element. The other part of the instrument is the battery box which contains the batteries. The probe is secured to the battery box with a snap fastener. The probe can be separated from the battery box by releasing the snap fastener on the top of the battery box and pulling the probe away from the battery box. For survey work, the probe can remain secured to the battery box.

The probe can be removed from the battery box and be placed in any position which will offer greater sensitivity. Since the detecting element, the sodium iodide crystal, is mounted in the bottom of the narrow end of the probe (opposite the meter end) there should be as little obstruction as possible between this portion of the probe and the area being surveyed. The end of the probe need not be pointed directly at the radioactive source to obtain a reliable response.

In the Model 117B, all components are mounted within the case. The crystal is located immediately behind the spot on the end of the case marked "Sample Check Spot." This is the most sensitive point on the instrument. The neon bulb on the top panel of the 117B is a pilot light and does not flash to indicate the presence of radioactivity.

---

*Reg. U.S. Pat. Off.

III. Definition of Terms

Certain terms are encountered in the use of radioactive materials that are peculiar to this field and which should be explained in order to make this text more understandable.

Radioactivity: The process whereby certain elements emit particles or rays due to the disintegration of the nuclei of their atoms. The main types of radioactivity are alpha particles, beta particles and gamma rays. Gamma rays penetrate matter in much the same manner as X-rays. Since gamma rays are the only type of radiation with appreciable penetrating power, they are of most importance to the prospector. Scintillation Counters have great sensitivity to gamma rays. They do not respond to alpha or beta particles.

Milliroentgen: the common unit of radiation. This term is usually expressed with a unit of time; i.e., milliroentgens per hour (abbreviated MR/HR), and expresses the number of units of radiation intensity in a field. If a man remains twelve hours in a radiation field whose intensity is five milliroentgens per hour, he will have been exposed to 60 milliroentgens. This is the maximum amount which the Atomic Energy Commission considers to be entirely harmless, even when repeated day after day.

Background: a certain portion of any radioactivity measurement is not attributable to the radioactive sample being measured, but results from other sources. This portion of the measurement is called "background." It is caused by cosmic radiation, natural radioactivity of the earth, and other sources. Since the background level can vary greatly, it must be measured separately and be subtracted from any measurement upon which it will have an effect.

EXAMPLE:

Sample reading	.35 MR/HR
Background reading	.02 MR/HR
Corrected reading	.33 MR/HR

In order to correctly establish the background effective in the measurement of a particular sample, the sample must be moved far enough away from the instrument so that it has no effect on the background reading.

IV. Description of Controls

A. MR/HR Range Control.

The range control has eight positions. The use of each of these positions is as follows:

1. OFF; when the switch is turned to this position, the entire instrument is turned off.
2. ZERO; when in this position, the meter can be electronically zeroed.
3. 5; when in this position, the instrument is set at the highest range. A full scale meter reading indicates that the instrument is exposed to a radiation intensity of 5 milliroentgens per hour. (The Model 111C does not have a 5 MR/HR position. This description corresponds to the 2.5 MR/HR position in which case full scale deflection is indicative of an intensity of 2.5 MR/HR.)
4. All succeeding, more sensitive, positions of the range control mean that when the range control is set to one of these values, a full scale reading indicates an intensity in MR/HR equal to the value selected on the control.

B. TIME CONSTANT Control.

Models 111B and 111C: The use of the TIME CONSTANT control is as follows: One of three positions can be selected by turning the knurled knob to FAST, MEDIUM or SLOW. The function of the MEDIUM and SLOW positions is to make the meter response slower than when the control is set to FAST. If the FAST time constant is in use, the meter will respond very rapidly to any change in radiation intensity. Since gamma rays do not normally occur at evenly spaced intervals, the FAST time constant permits the meter indication to fluctuate with the individual radiations and makes accurate measurement difficult, particularly if the intensity is very low. The MEDIUM and SLOW time constants retard the meter reaction to changes in intensity, resulting in a more stable, easier-to-read indication. In effect, the period over which the random gamma rays are averaged, is lengthened. The FAST time constant may be used for prospecting if the *average* value of the fluctuating reading is taken. It should be used for deciding on what range to set the range switch and for checking approximate levels of radiation. It is also desirable to use the FAST position when prospecting while travelling at high speed. The MEDIUM and SLOW positions should be used for obtaining more accurate readings. When using the MEDIUM position, the meter should be observed for at least 15 seconds, and the average reading used. In the SLOW position, approximately one minute will be required for the meter to reach its final reading.

Models 111 and 117B: The principles of operation are the same as those outlined above, however, Models 111 and 117B have only two constants: FAST and SLOW.

C. ZERO Control.

The ZERO Control is one of two controls covered by cap nuts. The meter can be electronically zeroed with this control by first turning the MR/HR range control to the ZERO position. The meter will momentarily give a reading and then return to zero. If the meter does not return to zero, remove the cap from the control and adjust this control until the meter does indicate zero. Since the meter zero position will change as the battery voltages change, it is necessary to check the zero position periodically during use. Such checks should be made in the first few minutes of operation and every half hour or hour thereafter as experience proves necessary. There is no set rule for the frequency of such checks because the rate of change of the zero position will depend upon the age of the batteries, the temperature, and minor variations in the vacuum tubes used in the instrument.

D. CALIBRATION ADJUST Control.

This control labeled CALIB. ADJ. on the Model 111 series and CALIB. on Model 117B is covered by a cap nut. It is used to compensate for changes in vacuum tube amplification as the batteries wear out. A calibrated check source — a trace of radium sealed in a plastic disc — is provided so that the user can conveniently check the instrument for such changes. Turn the MR/HR range control to the .25 MR/HR (.5 on the Model 111C) range and hold the check source flat and well centered against the end of the Model 111 series probe or against the "Sample Check Spot" of the Model 117B. After noting the reading, turn the disc over and repeat the measurement to discover which side gives the higher reading. Finally, with that side which gives the higher reading turned against the most sensitive point of the instrument, note whether the meter reading in MR/HR agrees with the number stamped in red on the disc. If necessary, remove the cap nut, and, with a screw driver, turn the CALIBRATION control until the meter indicates the value stamped on the sample. Greatest accuracy will be achieved in the operation if the instrument is switched to the SLOW time constant. For the best results, the setting of the CALIBRATION control should be checked each time the ZERO control is checked. Never adjust the CALIBRATION control unless the ZERO control has been checked first.

V. Meter Readings

Models 111, 111B and 117B have two rows of numbers at the major scale division marks on the meter face.

On all range switch positions in which the significant number of the full scale reading is 5 (.05, .5, and 5.0), read the lower row of numbers on the meter. On all range switch positions in which the significant numbers of the full scale reading are 25 (.025, .25 and 2.5), read the upper row of numbers on the meter.

When the range switch is in the .025 position, the major scale divisions on the upper row should be read as .005, .010, .015, .020 and .025 milliroentgens per hour (MR/HR).

When the range switch is in the .05 position, the major scale divisions on the lower row should be read as .01, .02, .03, .04, and .05 MR/HR.

When the range switch is in the .25 position, the major scale divisions on the upper row should be read as .05, .10, .15, .20 and .25 MR/HR.

When the range switch is in the .5 position, the major scale divisions on the lower row should be read as .1, .2, .3, .4, and .5 MR/HR.

When the range switch is in the 2.5 position, the major scale divisions on the upper row should be read as .5, 1.0, 1.5, 2.0 and 2.5 MR/HR.

When the range switch is in the 5.0 position, the major scale divisions on the lower row should be read as 1, 2, 3, 4, and 5 MR/HR.

Model 111C has three rows of numbers on the meter scale. These scales are read in the same manner as described above.

All scales are provided with five major divisions and 50 minor divisions. Each major division, therefore, represents one-fifth and each minor division one-fiftieth of the full scale reading of the range selected.

Generally, the most sensitive range should be used in prospecting and for low level area surveys. If the radiation present causes the meter needle to go off scale to the right, the switch should be changed to the next higher range. If the meter still goes off scale to the right, switch to the next higher range, and so on.

Because the meter needle will never be perfectly still, it is important to observe the *average* position occupied by the needle to be sure of the actual reading. For example, with the range switch set to the .5 position, if the meter needle fluctuates about the .15 mark on the scale, but half the time is to the left of that mark, and half the time is to the right of that mark, the correct reading is .15 MR/HR.

The following charts give examples of correct use of the scales for various indications on each range switch setting.

Note that changing the MR/HR range switch setting cannot alter the amount of radiation to which the instrument is exposed and so cannot affect the reading to be taken. However, the MR/HR range switch does affect the amount by which the meter deflects, determining which set of numbers is to be read on the meter face and indicating any change in the positioning of the decimal. In general, the setting of the MR/HR range control should be chosen so that a meter indication is obtained in the upper half of the meter scale.

VI. Operating Instructions

A. Turn the MR/HR range control to ZERO. There will be a momentary meter read-

METER READING CHART

(MODELS 111, 111B, AND 117B)

WHEN MR/HR SWITCH POINTS TO:	.025	.05	.25	.5	2.5	5
And meter needle points to .05 1 Correct reading is:	.005 MR/HR	.01 MR/HR	.05 MR/HR	.1 MR/HR	.5 MR/HR	1 MR/HR
And meter needle points to .10 2 Correct reading is:	.01 MR/HR	.02 MR/HR	.1 MR/HR	.2 MR/HR	1 MR/HR	2 MR/HR
And meter needle points to .20 4 Correct reading is:	.02 MR/HR	.04 MR/HR	.2 MR/HR	.4 MR/HR	2 MR/HR	4 MR/HR
And meter needle points half-way between .10 and .15 2 3 Correct reading is:	.0125 MR/HR	.025 MR/HR	.125 MR/HR	.25 MR/HR	1.25 MR/HR	2.5 MR/HR

METER READING CHART
(MODEL 111C)

WHEN MR/HR SWITCH POINTS TO:	.01	.025	.05	.1	.5	2.5
And meter needle points to .005 .01 .02 Correct reading is:	.002 MR/HR	.005 MR/HR	.01 MR/HR	.02 MR/HR	.1 MR/HR	.5 MR/HR
And meter needle points to .01 .02 .04 Correct reading is:	.004 MR/HR	.01 MR/HR	.02 MR/HR	.04 MR/HR	.2 MR/HR	1 MR/HR
And meter needle points to .02 .04 .08 Correct reading is:	.008 MR/HR	.02 MR/HR	.04 MR/HR	.08 MR/HR	.4 MR/HR	2 MR/HR
And meter needle points half-way between .005 and .01 .01 and .02 .02 and .04 Correct reading is:	.003 MR/HR	.0075 MR/HR	.015 MR/HR	.03 MR/HR	.15 MR/HR	.75 MR/HR

ing and then the needle will return to zero. If it does not return to zero, remove the cap nut from the ZERO control and adjust until it does indicate zero.

B. Turn the MR/HR range control to the least sensitive (5 MR/HR on Models 111, 111B, and 117B and 2.5 MR/HR on Model 111C) range and bring the instrument to the point from which the sample is to be measured. If the meter indication is below the upper limit of the *next* lower range control setting, turn the range control to this lower setting. If the indication is still low and falls below the upper limit of the *next* lower MR/HR range control setting, turn the MR/HR range control to this next lower setting, and so on. When measurements are taken, the user should always turn the MR/HR range control to the lowest range upon which an onscale reading can be obtained. The range should be increased only if the needle goes off scale to the right on the range being used. If the least sensitive range is being utilized and the needle still goes off scale to the right, the instrument should be moved back away from the activity until a reading can be made. In this event, if the intensity of the sample is to be compared with the intensity of another sample, caution should be taken to make sure that the distance from the samples is the same for both readings. The "INVERSE SQUARE" law applies here. That is, the radiation intensity decreases in proportion to the square of the increase in distance from the sample. The distance should be measured from the center of the sample to the center of the crystal.

EXAMPLE:

Reading from sample at 3 inch distance
= 2 MR/HR.
Reading from sample at 6 inch distance
= .5 MR/HR.

By taking a reading from this sample at 6 inches, the distance from which the first reading was taken has been doubled (multiplied by 2). Since the radiation intensity decreases in proportion to the square of the increase in the distance, the reading at 6 inches must be ¼ of the reading at 3 inches. The factor of increase in distance is 2; 2 squared is 4; therefore, the first-reading (2 MR/HR) is divided by 4 when the distance from the sample is doubled. 2 MR/HR divided by 4 equals .5 MR/HR.

From this example, it is apparent that if readings are taken from two samples to determine the relationship between the amount of radioactivity in each, any difference in the distance at which these readings are taken can cause a large error, if the inverse square law is not taken into consideration. When the sample is large, for example a bin of ore, the inverse square law is not effective at close range, and the radiation near a large quantity of ore tends to be constant.

C. Changing the TIME CONSTANT setting may be desirable during a measurement to reduce meter needle fluctuation. The TIME CONSTANT control can be used to obtain quick readings in the FAST position, medium readings in the MEDIUM position, or may be changed to the SLOW position if the needle fluctuation is too great to permit an accurate reading. Models 111 and 117B are not provided with a MEDIUM position. It is important to remember that when the SLOW time constant is used, the meter takes longer to reach its final reading (about 1 minute) and the meter should be watched for about one minute after it has reached its apparent final value. A more accurate reading can then be made and interpreted as the average of all needle fluctuations that would have been noted in that time, had a faster time constant been used. Somewhat better accuracy can be obtained by waiting three or four minutes. With practice, it is possible, by this method, to obtain successive readings which agree within 2 or 3 of the smallest meter divisions on the most sensitive range.

D. Occasionally, it is desirable to check the calibration of the instrument. The procedure for checking calibration is outlined in Section IV-D. This procedure should be repeated after the instrument has had an hour or more of continuous use and after a rest period of an hour or more. After the instrument has been in use for some time, the CALIBRATION control will no longer bring the meter to the desired reading. This usually indicates that the batteries are exhausted and should be replaced.

VII. Use of Recorder with Models 111B and 111C

Models 111B and 111C can be used with a continuous strip recorder. However, their electrical output is not sufficient to operate a recorder directly. In order to increase the output to a level sufficient to drive a recorder, it is necessary to use a preamplifier. The MODEL 116 PREAMPLIFIER manufactured by P.R.I. (price $99.50) is especially designed for this purpose. Two tip jacks are located on the 111B and 111C probes marked RECORDER, to which the preamplifier should be connected. A suitable recorder is the AW portable, 1 MA. D.C. type #2 minute feed spring-drive recorder. This recorder is manufactured and shipped by the Esterline-Angus Co., but may be ordered from Precision Radiation Instruments, Inc., at a price of $370.00.

VIII. Prospecting for Uranium

A very important factor in seeking radioactive minerals is to know when the instrument being used is actually giving an indication of the presence of such minerals. Scintillators have been used in mines of economic value to compare the radiation level of a commercial deposit of radioactive ore with that of ordinary "country" rock. The radioactivity inside a good uranium mine may be 10 to 100 times greater than that of normal soil or rock.

The background reading will normally fall between .005 and .03 MR/HR, depending on locality and other factors. Some prospectors adhere to the policy that any reading over normal background is adequate reason for further investigation of the locality; such as surveying the surrounding area or taking samples from below the surface. This is good practice since a deposit may be buried under rock or soil overburden which reduces the intensity of radiation at the surface or in the air above it. An indication of as little as 10% above background may indicate the presence of a valuable uranium deposit. There are several ways in which to search for uranium with a Scintillation Counter. The method used should be chosen to fit the prospector's particular requirements.

The most direct method is to simply hold the Scintillator close to a sample of every type of rock encountered on a prospecting mission. If any sample shows higher than normal radioactivity, its origin should be located and more samples tested until it can be determined whether or not significant values of radioactivity are present. However, the Scintillation Counter is so sensitive that this detailed a preliminary survey is unnecessary. Many prospectors, therefore, prefer to carry the instrument in a car or truck and to stop for more detailed investigation whenever an area of slightly higher than average radioactivity is encountered.

If the survey is conducted from a moving vehicle, any location where an increase in meter reading is encountered should be noted. If possible, a survey should be made from the vehicle, or on foot, in a circle of 50 yards radius around the location. If nothing further is encountered, this would indicate that the material is in a pocket, or that the remainder of the vein is covered by an appreciable quantity of earth or rock. At this point, the prospector may dig below the surface to determine the size and value of his original find, or look further for a more significant indication in another locality. Care should be taken in planning surveys to make certain that as much of the area as possible is surveyed.

Samples should be collected from the area of high radioactivity and should be checked by holding them against the sensitive end of the probe (or the Sample Check Spot on the Model 117B), observing the meter reading. If the ore appears to have promise, send at least a one-pound sample to the U.S. Geological Survey, Geochemistry and Petrology Branch, Bldg. 213, Naval Gun Factory, Washington, D.C. They will assay the sample without charge and give their report only to the individual submitting the sample. If their report indicates the ore has commercial value, it should be offered to the U.S. Atomic Energy Commission, 70 Columbus Avenue, New York 23, New York, Attention: Raw Materials Operations.

The best method for locating radioactive deposits is to construct radioactivity contour or grid maps. To do this, it is necessary to systematically take measurements over a large area and record them on a map. The area to be explored should be ruled off like a checkerboard, or grid, and readings taken at the corners of each square. In preliminary work, when it is desirable to cover the most ground in the shortest time, the squares may be made quite large, say 300 feet on a side. If, after all measurements have been mapped, there appear to be significant variations in some portions of the area covered, then, in the regions of interest, additional readings should be made at the centers of each of the squares. This procedure will produce a set of measurements from which generally reliable radioactivity contours (called isorads) can be drawn. The purpose in making the additional set of readings at the center of the squares formed by the first set is to obtain the most uniform coverage, i.e., each new point is located at the maximum possible distance from all other points.

When taking measurements in this manner, it is desirable to hold the instrument as high above ground as convenient in order that the radioactivity over a fairly large area of ground is averaged in the measurement at each point. The choice of distance to be used between points in such a survey depends in great degree upon the local topography. For example, if the region is relatively flat, with little or no outcropping, fairly large distances between points can be used. If, however, the terrain is irregular, readings should be taken at intervals sufficiently close together to insure that at least a few readings are taken near each topographic feature. For purposes of finally determining the extent of a newly discovered radioactive ore body, measurements are often taken every 10 to 20 feet.

After a satisfactory number of readings have been taken in an area and recorded in their respective locations on a map, it will generally be found that the easiest way to develop contours is to divide all the readings into three ranges, high, intermediate, and low; then, with a red pencil circle each high value and, with a blue or green pencil, circle each low value. By holding the map at some distance from the eyes, it is usually possible to distinguish any significant pattern that may be present.

If there are any well defined areas in which the readings are uniformly high, or in which only one figure is outstandingly high, these areas should be investigated further by taking readings on particular samples or by making radioactivity measurements in test drill holes put down to whatever depth is practical. To measure radioactivity in drill holes, the Precision Radiation Instruments Model 122 Drill Hole Probe and Model 121 Prober Geiger Counter are recommended.

For additional information on prospecting, the book "PROSPECTING FOR URANIUM" can be obtained from the Superintendent of Documents, U.S. Government Printing Office, Washington 25, D.C.; price 55 cents.

IX. Airborne Uranium Surveys

Aerial surveys require more careful planning because of the greater speed at which an aircraft travels. It is customary to mark a rectangular area on a map, then fly over the area from one end to the other as one would plow a field. The aircraft should fly at the slowest speed and lowest altitude consistent with safe flying. Atomic Energy Commission aerial surveys with Model 111 Series Scintillators are made at altitudes of 50 to 100 feet. Surveys by the United States Geological Survey with the 111 Series are flown at 500 feet. The recommended flying speed is 80 to 100 m.p.h. Sometimes, easily located objects such as long streamers are dropped at points where high readings are noted and these locations are later surveyed from the ground.

In some aircraft, self-luminous meter faces on the control panel contain sufficient radium to disrupt the measurement of the low values of radioactivity found in aerial survey work. Such "stray" sources of radioactivity cause interference in two ways. First, they can cause an increase in the normal amount of radiation and so prevent accurate measurement of very low radioactivity values. Second, a more serious kind of error can occur because of variations in the amount of such stray radioactivity reaching the Scintillation Counter as a result of a change in position of the pilot or passengers during flight. Since the human body absorbs more than half of the radiation striking it, misleading changes in intensity can be caused by a person entering or leaving the pilot's compartment.

The existence of such interference can be detected by taking two readings of background radioactivity in an area remote from other aircraft. The first reading should be taken inside the plane with the instrument in the position it would normally occupy during flight. A mark should be made on the ground indicating the position over which the instrument was positioned during the first reading. Note also the height above the ground of the instrument during the first reading. Move the plane and replace the instrument in — as nearly as possible — the same position it occupied for the first reading. Take a second reading. The difference between the two is assumed to be the amount of radioactivity from the control panel. If the aircraft control panel contributes more than .002 MR/HR to the Scintillator readings, one or more of the following steps should be taken to reduce the effect.

(a) The instrument may be mounted farther back in the plane. (Doubling the distance from the control panel will reduce its effect fourfold.)

(b) The meter faces may be changed to employ ultraviolet or other illumination instead of radium self-luminous paint.

(c) Mount the Scintillator in a lead shield so that only that radiation from below the plane can reach the scintillation crystal. Such a shield should be one inch thick to insure protection from any excessive amount of stray radioactivity; however, if the amount of stray radioactivity is not large, a ½″ thick shield will suffice. (One-half inch of lead will absorb about 70% of the radiation striking it.)

X. Detection Range

It is not possible to specify the distance at which a Scintillator will detect an ore deposit. This depends on many factors such as the size and quantity of the deposit, the thickness and type of overburden covering the deposit, whether the overburden itself is radioactive, etc. It appears that important, though very small, traces of radioactivity are often located in the soil many yards away from, or over the actual ore body. Such traces of radioactivity produce a weak response in the Scintillation Counter as though the radiation from the actual ore body was penetrating the intervening soil or overburden. In one case, by careful measurement and the use of contour maps, a large body of uranium ore was discovered 200 feet below the surface. The surface radioactivity over the ore was only twice that of the surrounding area. Upon drilling a test hole down to the ore, it was found that the telltale radioactivity was located entirely in the uppermost five or six feet of earth. At a distance of 100 feet below the surface (and 100 feet from the ore body) there was actually less radioactivity than occurred on the surface.

Experiences of this kind are common enough to conclude that there is no simple answer to the question, "How deep can buried ore be detected?" It can be shown that a very few feet of barren quartz or limestone can almost completely absorb the radiation from a large body of uranium ore beneath it. But it is also true that telltale traces of uranium are often found at large distances from the parent body and these traces often enable the prospector to locate the real vein.

XI. Assaying with a Scintillation Counter

There are, in general, two ways in which to determine the amount of uranium in ore. The most fundamental way is to directly measure the uranium in a sample by chemical analysis. Chemical assays are essentially infallible, but they require the use of a chemical laboratory and are relatively time consuming.

The other method of assaying uranium ore is the so-called radiometric method. This method is based on the fact that in almost every case, the amount of radioactivity of a sample of ore (which can be measured with a Scintillator) is proportional to the amount of uranium in it. There are some important exceptions to this, however. Uranium is not the only radioactive element which occurs in nature. Thorium is a radioactive metal, somewhat similar to uranium, and, in some regions, the two metals occur in the same ores. For example, in Southern California, several deposits are known to contain both thorium and uranium. The radioactivity of these ores cannot be used as an accurate measure of the uranium content since the radioactivity of thorium cannot be easily distinguished from that of uranium. The accuracy of a radioactive assay is also related to the fact that the radioactivity of uranium itself — alpha particle emission — is not of the type which can be detected on Scintillation Counters. However, the products of the radioactive decay of uranium do produce gamma radiation, and two of these, radium and radon, are actually responsible for most of the radioactivity observed in uranium ores. Because radium is chemically much different from uranium, when uranium ore is exposed to the weathering action of air and water, at the surface of the earth, radium may be dissolved away and redeposited nearby in other rocks or soils. Thus, samples of weathered uranium ore may exhibit higher or lower levels of radioactivity than would be expected on the basis of their true uranium content.

In spite of these potential errors, the method of radiometric assaying is so convenient that it is very frequently used and a high degree of accuracy can usually be obtained. For example, in most mines the ratio of radioactivity to uranium content is relatively constant for ore mined below the surface weathered zone. Once the ore has been properly sampled and assayed by chemical means and its radioactivity measured, the probable assay of other ore from the same mine can be estimated in proportion to its radioactivity. In addition, for areas known to be "in equilibrium" and free of thorium, it is possible to predict quite accurately the amount of radioactivity associated with uranium by radiometric assaying. The following methods of radiometric assaying with the Model 111 Series have been developed to apply to various field situations. Method "A" can be used with the Model 117B, but a Model 111 Series instrument is required for Methods "B" and "C."

Method "A" (Hand Specimens). For very rough estimates of assay value which can be made "on the spot," in the field, select a nearly round piece of ore weighing about ¼ of a pound and hold it close against the Scintillator's most sensitive point. Such a specimen will produce a reading in MR/HR which is approximately one-tenth the percentage of uranium oxide (U_3O_8) it contains. That is, a sample containing 1% U_3O_8 will give a reading of about .1 MR/HR over the normal background reading. If the specimen is not of uniform composition, several readings should be taken on different sides and the best estimate will be the average of the readings.

Method "B" (Large Samples for Appraisal of New Finds). For assays accurate to about 75%, a fairly large (several pounds) sample of ore should be taken from the vein deposit or outcrop. Such a sample should be taken so that, as far as possible, it represents a true cross-section of the ore that might be actually mined and sold. The entire sample should be pulverized and well mixed.

To determine the percentage of uranium oxide contained in the sample, first set the TIME CONSTANT switch on the Model 111 Series instrument to SLOW, check the ZERO adjustment and CALIBRATION control setting, then:

1. Place the end of the Model 111 Series probe flat against the top of the cover of the assay container supplied with the Model 111 Series instruments.

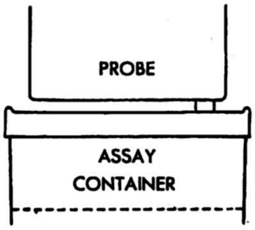

Be sure that the bottom of the probe is held parallel to the top of the assay container, as shown above.

2. Take the background reading.
3. Fill container to the point indicated with pulverized ore and take a second reading with the probe in the same position as in the first step.
4. Deduct the background reading from the ore reading.
5. Multiply the answer by ten for percentage of uranium oxide.

EXAMPLE:

Background reading	.01 MR/HR
Ore reading	.03 MR/HR
Difference	.02 x 10 = .2

The ore is approximately two-tenths of 1% uranium oxide.

Method "C" (Ore Control in Developed Mines). The preceding methods of assaying ore are based upon the assumption that the ore contains no thorium, that the uranium is present with a precisely known percentage trace of radium, and that the instrument has been perfectly calibrated. The following procedure, especially suited to use of the Model 111 Series instruments, tends to make these assumptions unnecessary. It is especially useful for monitoring quality of ore being shipped from a mine. With this procedure, assays of better than 90% accuracy can be obtained. In brief, the method is to calibrate the Scintillator with a known quantity of ore which has been chemically assayed and then replace the known ore with the sample to be measured.

The reading resulting from the new sample will be directly proportional to its uranium oxide content, provided only that it is the same type of ore as that which had been assayed.

Place a precisely weighed sample (about 1½ pounds) of assayed pulverized ore in a ring shaped container, like a jello mold tin, the inner diameter of which is about 2½″ and the outer diameter of which is about 4½″ (container should be at least 3″ high).

After checking the zero of the Model 111 Series Scintillator, insert the probe into the center of the ring so that the crystal in the probe end is surrounded by the ring of powdered ore. Adjust the CALIBRATION control of the instrument so that the instrument reads in MR/HR the same value as the percent of U_3O_8 in the ore sample. Without touching the CALIBRATION control, replace the assayed sample with an exactly equal weight of the pulverized ore to be assayed. Record the new reading of the Scintillator. Remove the second sample of ore and record the reading of the Scintillator with the empty ring. This is the background reading. Compute the percent of U_3O_8 in the new sample by multiplying the percent of U_3O_8 in the assayed sample by the ratio of reading of the new sample less background to the reading of the assayed sample less background. For example:

Report of chemically assayed sample:	1.31%
Set Model 111 Series instrument to read:	1.31 MR/HR
If Model 111 Series instrument with unknown new sample reads:	.75 MR/HR
And Model 111 Series instrument background reading as set is:	.023 MR/HR

Percent U_3O_8 in unknown sample =

$$\frac{.75 - .023}{1.31 - .023} \times 1.31 = .74\%\ U_3O_8$$

With each method, serious errors may occur if these instructions are not precisely followed. It should be borne in mind that methods "A" and "B" depend on the absence of thorium and equilibrium of the ore. Method "C" requires only that the ratios of radium, thorium, and uranium remain constant from one sample to the next.

When using any of the three methods, the readings should always be taken at a location well removed from ore bodies.

XII. Special Factors Affecting Results

The air and all rocks and soils are radioactive to some extent. Their radioactivity is due to the presence of minute traces of radioactive elements, including uranium. Because the radioactivity in rocks and soil is generally from traces or "impurities," only general statements can be made concerning the amount of radioactivity associated with particular types of rock. In general, it may be said that granite, pegmatite and shale are likely to be more radioactive than limestone, quartzite, or sandstone. However, there will be many exceptions to this rule; for example, the highly radioactive carnotite is often found in sandstone.

Because of the effect of local topography (drainage ditches, rock outcrops, bogs, road cuts, etc.) on radioactivity distribution, care must be used in interpreting radioactivity readings if precise readings are desired. In areas where shale may be at or near the surface, the radioactivity will usually be high. Lakes, swamps, and rivers usually produce low values of radioactivity. The radioactivity over a fresh road cut will frequently be abnormal (either high or low). Radioactivity readings frequently show a characteristic change over faults, being higher on one side than the other.

Radioactivity in the air commonly accounts for between 10 and 30 percent of the background reading observed in an unshielded Scintillation Counter located on the surface of the earth. The amount of radioactivity in the air at any given location may vary from day to day and with speed and direction of prevailing winds. There is some evidence that the radioactivity of the atmosphere is lower when barometric pressure is high. If precise readings of background radiation are being made, it is important to determine to what extent the atmospheric radioactivity is contributing to the measurement. The best measurements will thus be made on days of high barometric pressure and no wind. The effect of the atmosphere can be determined by repeating readings on successive days or at periods when the direction of prevailing winds has changed.

Scintillation Counters do not respond to any ore that is not radioactive. However, in taking readings for uranium, it should be remembered that thorium is also radioactive. There is no convenient way to distinguish between the readings obtained from uranium and thorium (other than chemical analysis). However, since thorium is also a valuable mineral, this is not a serious disadvantage.

Prospectors are occasionally misled by the "mass effect" and believe they have found a valuable uranium deposit when actually they are in the presence of a large body of very low grade ore which is valueless. In general, readings of several times background are not significant unless a small sample which gives a good reading can be found either at the surface or below the surface. If good readings can be obtained in an area, but not from an individual ore sample, this indicates that either the ore body is deeply buried or that the reading is due to the "mass effect." Another situation in which "mass effect" becomes an important factor occurs when a probe is placed in a hole in the ground. If the soil is even slightly radioactive, the measurement taken is the *total* of the radiation from the soil all around the probe and will, therefore, produce a higher reading than when the probe is at the surface and is being influenced only by radioactivity from the surface.

All that is needed inside a mine, when tracing a vein or sedimentary deposit, is a "stop" or "go" signal. The intensity of meter readings is unimportant. To reduce intensity of meter readings, turn the CALIBRATION adjustment down to get readings of lower intensity.

In a mine having a particularly high level of radiation, the Scintillator may be held between the user's body and the surface being worked and the user's body will act as a shield, reducing the "mass effect."

Erroneous readings can result if the instrument is used at temperatures above 115° Fahrenheit. At temperatures above 115° Fahrenheit, the so-called "dark current" from the photomultiplier tube may increase. This increase is registered by the meter on the instrument as an increase in radiation intensity. The photomultiplier tube is located in the probe of Model 111 Series Scintillators. When using these instruments above 115° Fahrenheit, the probe can be cooled by wrapping a cloth around it, similar to the cloth used for Army canteen covers. This cloth should be dampened. The resultant evaporation of moisture from the cloth will cool the entire probe, including the photomultiplier tube.

Readings with the instrument will be affected by the presence of ice and snow on the ground. Ice is a particularly efficient absorber of gamma radiation. Most of the gamma rays will be absorbed if the ice is three or four feet thick. The extent that snow will absorb gamma radiation depends upon the thickness of the layer of snow and how closely it is packed.

The amount of radioactivity present varies directly with altitude. When using the Scintillator in an aircraft, it is essential to make allowances for variations in altitude due to local topography. For example, when passing over even a small hill, an increase in reading should be expected since, in effect, the aircraft is closer to the ground. False indications can stem from the ignition system of the aircraft. If this occurs, the condition can be corrected by using suppressors on the spark plugs and by grounding the Scintillator to the frame of the aircraft.

XIII. Oil Exploration with Scintillation Counters

The art of oil exploration with scintillation type instruments is, at present, in an experimental stage. A theory has been advanced to account for the patterns of radiation existing in the areas of known oil fields. The validity of the theory is questioned by some individuals who feel that insufficient statistical results are as yet available in the form of reports on new producing oil wells whose existence was predicted by this method. However, there is a considerable body of opinion which holds that scintillation type instruments are a valuable aid in oil exploration.

Model 111 Series Scintillators have frequently been used for oil exploration; however, they cannot be recommended for this purpose. The low level measurements in this type of work require an instrument of much greater sensitivity such as the Model 118 ROYAL SCINTILLATOR.

XIV. Theory of Operation

Model 111 Scintillator employs a 1″ x 1″ sodium iodide crystal with an RCA 6199 photomultiplier tube. Models 111B, 111C and 117B utilize the same type of photomultiplier, but contain different sized crystals. Model 111B contains a 1½″ x 1″ crystal, Model 111C a 2¼″ x 1″ crystal, and Model 117B contains a 1″ x ½″ crystal. The photomultiplier is enclosed in a magnetic shield to prevent defocusing by the earth's magnetic field. When gamma rays penetrate the crystal, they cause it to scintillate or throw off minute flashes of light. The light flashes are converted to electrical pulses by the photomultiplier tube and the tube also greatly amplifies these pulses. The voltage pulses produced by the phototube vary widely in size. In the portion of the circuit following the phototube, they are converted to pulses of identical shape and amplitude. The average rate of arrival of these uniformly shaped pulses is then measured in a continuously integrating voltmeter which indicates the MR/HR level equivalent to the average counting rate. A relaxation oscillator power supply is used to obtain the one thousand volts required for operation of the photomultiplier tube. When current which has been flowing through an inductance or choke coil is suddenly cut off, a large transient voltage appears across the coil. In the power supply circuit, a pentode vacuum tube is used to establish a steady current in a choke coil, and a neon tube connected as an oscillator periodically (about 100 times a second) interrupts the choke current. The resulting surges of voltage across the coil are rectified and filtered to produce the high voltage direct current needed to operate the photomultiplier. A corona discharge type voltage reference tube is used to return a portion of the output high voltage to the grid of the pentode, and thus the average current in the pentode and choke are controlled to produce a constant value of high voltage independent of battery voltage changes.

XV. Preventive Maintenance and Battery Replacement

An occasional calibration check insures the user that batteries and other electronic components are in proper working order. The first indication of weak batteries is an inability to calibrate the instrument. Removing the batteries is easily accomplished by simply pulling them out of the box. Care should be taken when making replacements to be sure that negative and positive terminals are properly connected, and that new batteries are of the types recommended. The batteries last much longer under intermittent use than when used continuously. Under intermittent conditions, a complete replacement of the batteries should only be necessary approximately once a year in the Model 111 Series and twice a year in the Model 117B. In the event the instrument is stored for long periods, such as one year, the batteries should be removed. Even at freezing temperatures, batteries can be stored successfully for several years. However, the life of a battery in use at 32° F will be only a few percent of normal.

BATTERY COMPLEMENT:

Model 111 Series

2 RCA #VS016, or 2 Eveready #467	67½ volt
2 RCA #VS084, or 2 Eveready #412	22½ volt

4 RCA #VS036, or 4 Eveready #D99	1½ volt
Model 117B	
2 RCA #VS055, or 2 Eveready #455	45 volt
1 RCA #VS084, or 1 Eveready #412	22½ volt
4 RCA #XS036, or 4 Eveready #D99	1½ volt

The 1½ volt D99 batteries should be replaced only by new D99 batteries, or equivalent leakproof cells.

Although ruggedly constructed, the Scintillator is an electronic instrument and should be treated accordingly. It can be damaged by improper or rough treatment.

XVI. Corrective Maintenance

Access can be gained to the circuit components of Model 111 Series Scintillators by twisting and then pulling the two halves of the probe apart. To service the Model 117B, open the two latch fasteners and lift the instrument out of its case.

In both units, the crystal is hermetically sealed in an aluminum can with a plastic window, and this assembly should never be opened since even minute amounts of moisture will damage the crystal. Failure can be due to the common faults of electronic circuits, such as burned out resistors, shorted capacitors, tubes, etc. Standard servicing techniques can be used with certain exceptions. Because many ohmmeters produce enough voltage to burn out subminiature tube filaments, such tubes should never be checked directly for filament continuity. The filament can be safely checked by placing a one thousand ohm resistor in series with the ohmmeter. The resistance of a normal filament will then be read as a very small increase over the value of the thousand ohm resistor. The 1000 volts across the photomultiplier tube can be measured accurately only with an electrostatic voltmeter. Any ordinary meter, even of the vacuum tube type, will load the circuit sufficiently to cause a drop in voltage of 100 volts or more. An oscilloscope with a fast preamplifier and triggered sweep not slower than five microseconds may be required for some servicing functions. Ordinary service shops do not have such equipment and an otherwise qualified service man, inexperienced with Scintillation Counters, could seriously damage the photomultiplier assembly. It is advisable, therefore, for servicing to be performed by a shop experienced with Scintillation Counters and equipped with proper instruments.

XVII. Laboratory Calibration Procedure

A gamma ray source of known value (in MR/HR) must be used to recalibrate the Scintillator. It is desirable to use a radium source for this purpose. A source which will produce an intensity of 1 MR/HR is necessary for most accurate calibration. A radium source of one millicurie equivalent radium strength will produce an intensity of .97 MR/HR at a distance of one meter. Intensities at other distances can be computed by using the inverse square law.

Place the source at a distance from the center of the crystal so that the calculated intensity at the center of the crystal will equal ¾ full scale deflection on the range being used. Remove the cap nut from the CALIBRATION ADJUST control after checking the zero setting and adjust this control until the meter reads the calculated intensity *plus* background intensity and scattering. The instrument will then be properly calibrated.

XVIII. Guarantee and Factory Service

All parts except the batteries are guaranteed for a period of ninety days from date of purchase against defects in workmanship and material. The batteries cannot be guaranteed as they may be easily damaged by misuse. Always check the batteries before returning the instrument for service. The instrument should be returned in the original packing material or be covered on all sides with a thick layer of soft packing material.

To obtain service, pack the instrument carefully as described above, and return it insured and prepaid to your nearest Authorized Service Station. The following list of service stations is not necessarily complete as we are continually adding additional new facilities for your convenience. If you do not find a service station listed in your area, write us and we will advise you of the name of your closest Factory Authorized Service Station. Enclose a note stating exactly in what way the instrument has not been performing properly, from whom it was purchased and the date of purchase. Ship to:

P.R.I. Authorized Service Stations

ALASKA

ANCHORAGE RADIO & TELEVISION, INC.
443 Fourth Avenue
Anchorage, Alaska

ARIZONA

COMMERCIAL RADIO CORPORATION
747 North Stone
Tucson, Arizona

VINSON-CARTER ELECTRIC COMPANY
325 North Fourth Street
Phoenix, Arizona

CALIFORNIA

ALAMEDA RADIO & TV CO.
612 S. Victory Boulevard
Burbank, California

ENGINEERS SYNDICATE, LTD.
5011 Hollywood Boulevard
Los Angeles, California

INDUSTRIAL INSTRUMENT SERVICE CO.
606 North Ventura Avenue
Ventura, California

LAIDLEY & BAMMES RADIO CO.
1280 Court Street
Redding, California

ROBERTS ELECTRIC
821 Palm Avenue
Imperial Beach, California

TELEVISION SERVICE CO.
900 Colton
Colton, California

THE ROBERT DOLLAR COMPANY
Marine Division
50 Drumm Street
San Francisco, California

COLORADO

G & H URANIUM
Post Office Box 1467
Durango, Colorado

GEIGER CENTER
105 East Colfax Avenue
Denver, Colorado

MINERALS ENGINEERING COMPANY
801 Fourth Avenue
Grand Junction, Colorado

MICHIGAN

EVALUATION SALES & SERVICE
211 East Packard
Mt. Pleasant, Michigan

MISSOURI

WILSON-WILEY COMPANY
328 Richards Road
Kansas City, Missouri

NEVADA

LASSEN HOME SUPPLY
734 South Virginia Street
Reno, Nevada

NEW MEXICO

SAM'S RADIO SERVICE
218 Vassar, S. E.
Albuquerque, New Mexico

NEW YORK

AUTHORIZED MANUFACTURERS SERVICE COMPANY
919 Wycoff Avenue
Brooklyn 27, New York

NORTH DAKOTA

PAT'S RADIO & ELECTRONIC SERVICE
Bowman, North Dakota

P.R.I. Authorized Service Stations, Cont.

OREGON

HAWTHORNE ELECTRONICS
200 S.E. Hawthorne
Portland, Oregon

TEXAS

CONANT ELECTRONIC SPECIALTIES CO.
1801 East Mitchell Street
Arlington, Texas

FONVILLE ELECTRONIC SERVICE
120 South Oak
Pecos, Texas

MUNDINE RADIO & TELEVISION SERVICE
217 East White Avenue
San Antonio, Texas

UTAH

ENGINEERS SYNDICATE, LTD.
337 No. Main Street
Moab, Utah

WARREN TELEVISION & RADIO COMPANY
28 South Main Street
Salt Lake City 1, Utah

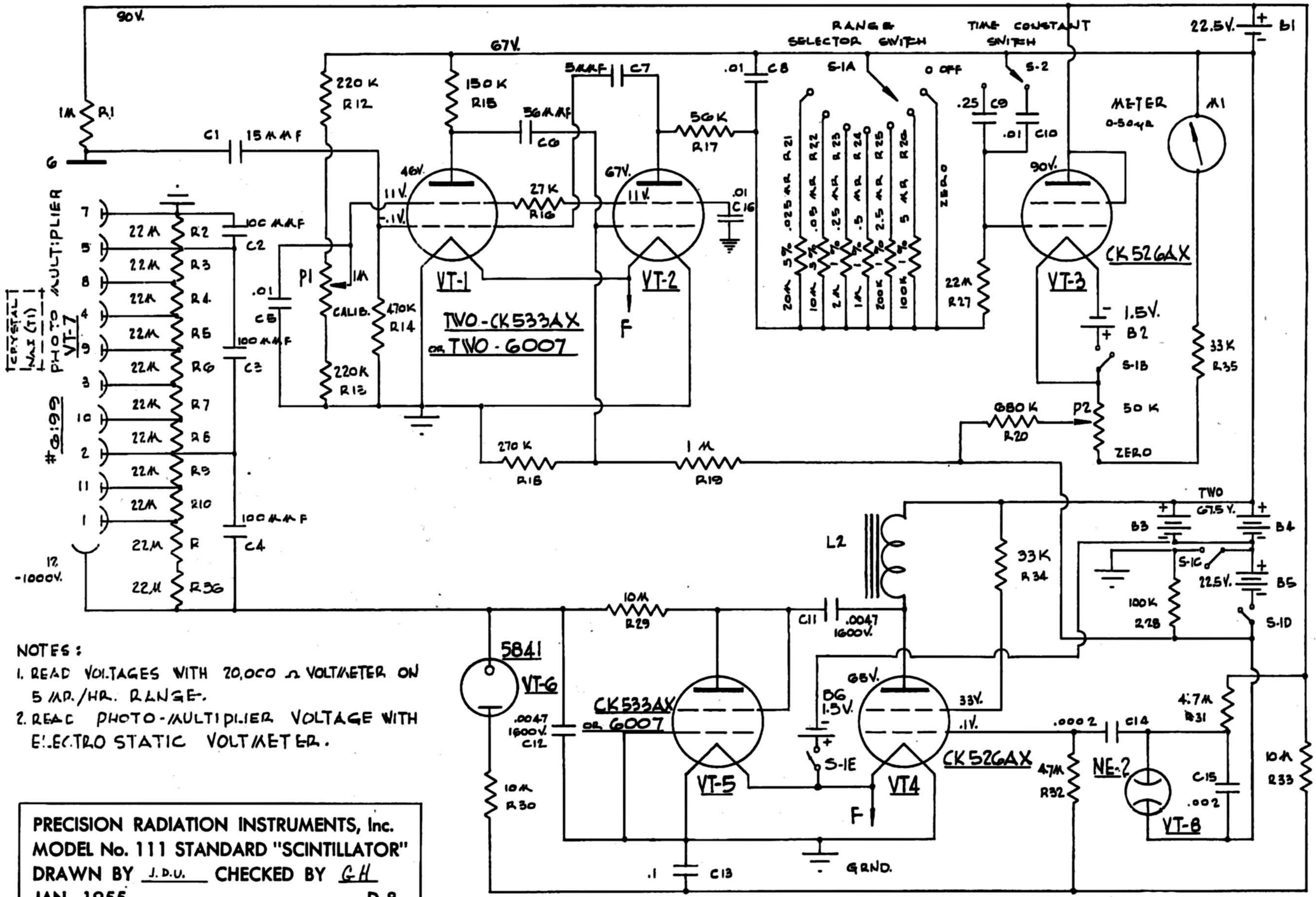

NOTES:

1. READ VOLTAGES WITH 20,000 Ω VOLTMETER ON 5 MR./HR. RANGE.
2. READ PHOTO-MULTIPLIER VOLTAGE WITH ELECTRO STATIC VOLTMETER.

PRECISION RADIATION INSTRUMENTS, Inc.
MODEL No. 111 STANDARD "SCINTILLATOR"
DRAWN BY J.D.U. CHECKED BY G.H.
JAN. 1955 D-8

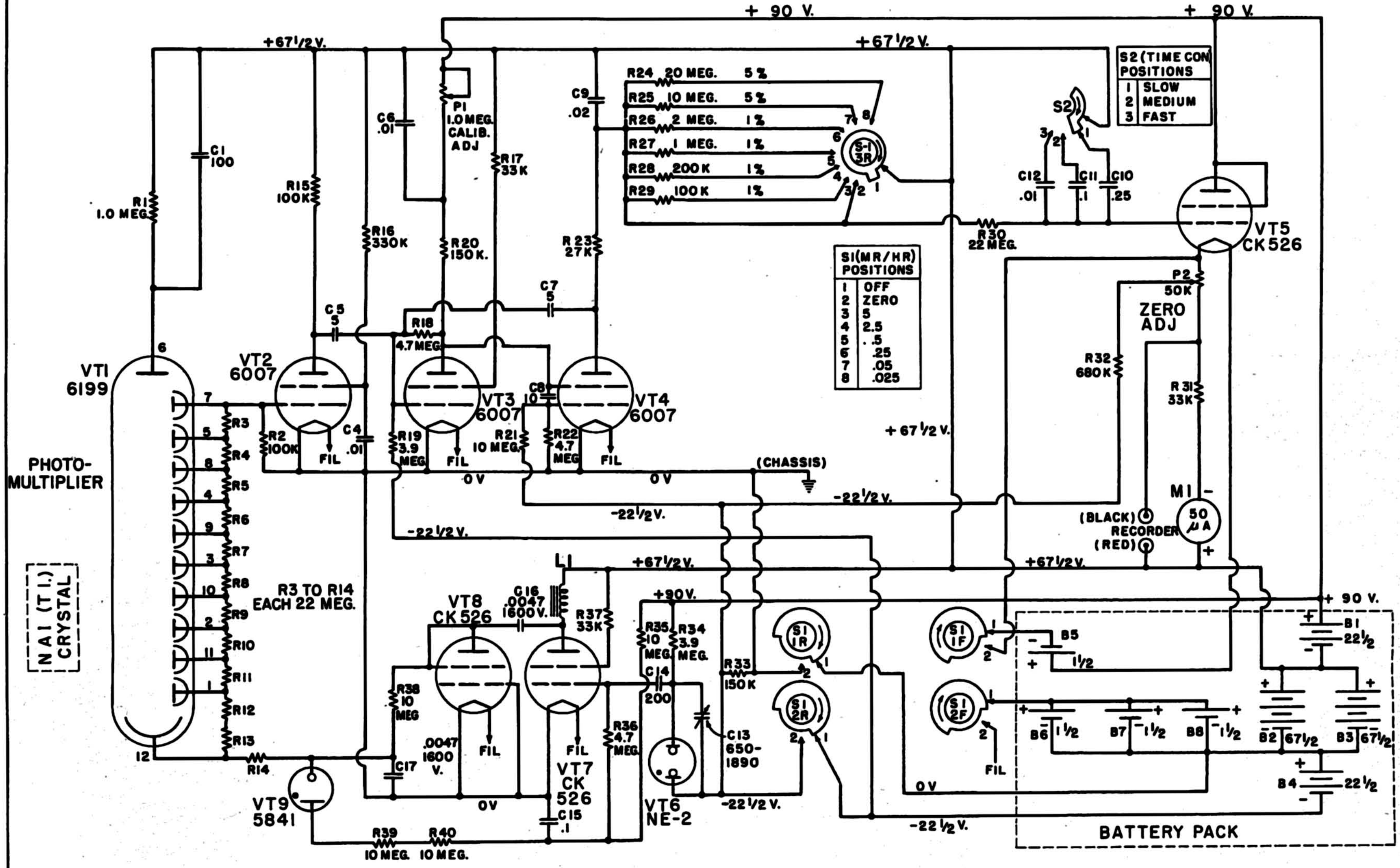

NOTES:~

1. ALL SWITCHES SEEN FROM KNOB END, DECK "1F" IS FRONT (KNOB) SIDE OF DECK NEAREST KNOB, ETC.
2. ALL CAPACITORS GREATER THAN 1 ARE IN μμF ALL LESS THAN 1 IN μ F.D.
3. VOLTAGES SHOWN TO CHASSIS WITH S1 IN "ZERO" POSITION.
4. ONE OR MORE RESISTORS (R14, R39 OR R40) MAY BE SHORTED OUT TO ADJUST HIGH VOLTAGE.
5. IN EARLIER PRODUCTION, C9 WAS .01 AND C12 WAS .005.

PRECISION RADIATION INSTRUMENTS, INC.
MODEL 111B DE LUXE
"SCINTILLATOR"

DRAWN BY PRO.
CHECKED BY GH
MARCH 1955

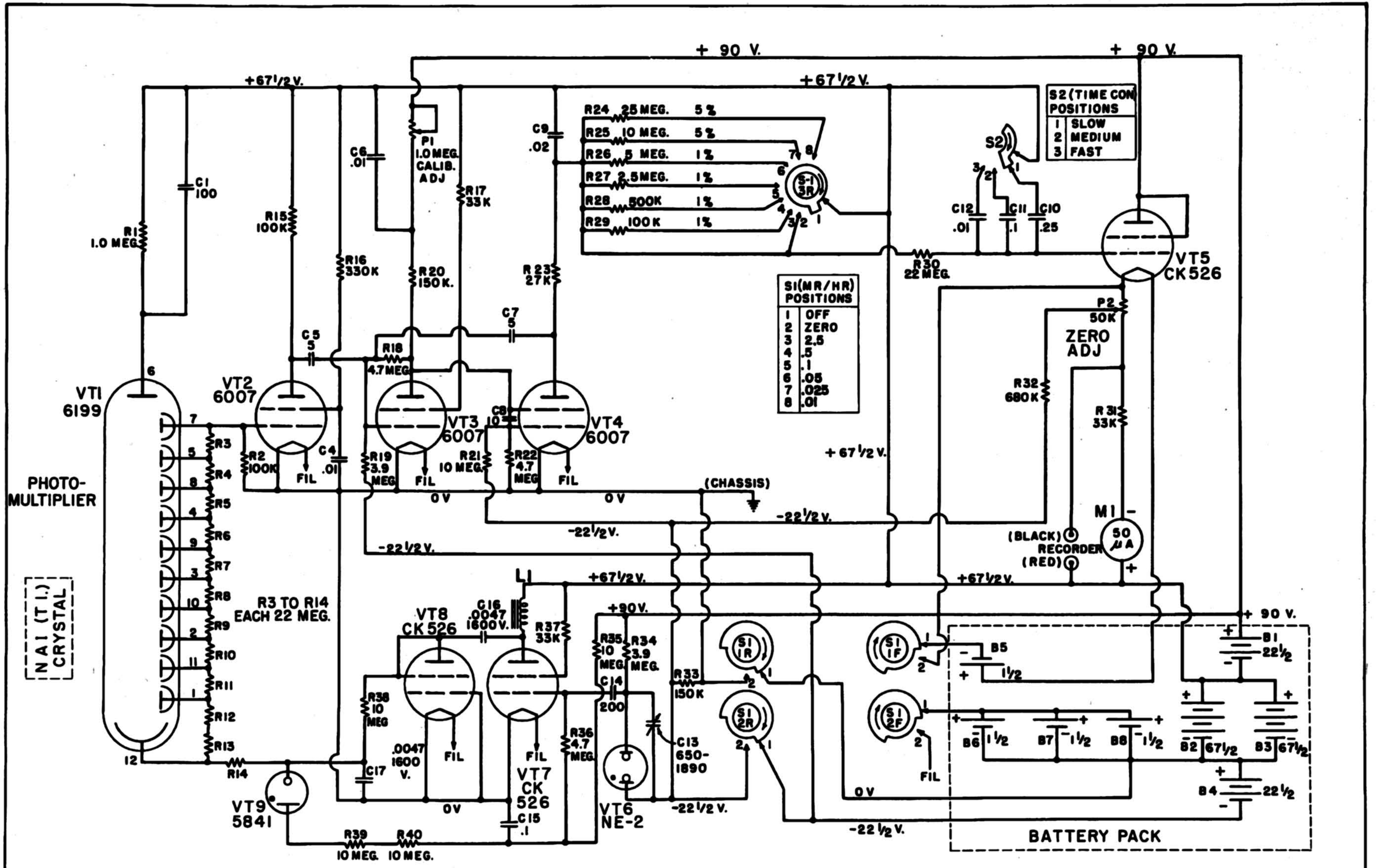

S2 (TIME CON) POSITIONS	
1	SLOW
2	MEDIUM
3	FAST

S1 (MR/HR) POSITIONS	
1	OFF
2	ZERO
3	2.5
4	.5
5	.1
6	.05
7	.025
8	.01

NOTES:~

1. ALL SWITCHES SEEN FROM KNOB END, DECK "1F" IS FRONT (KNOB) SIDE OF DECK NEAREST KNOB, ETC.
2. ALL CAPACITORS GREATER THAN 1 ARE IN μμF ALL LESS THAN 1 IN μ F.D.
3. VOLTAGES SHOWN TO CHASSIS WITH S1 IN "ZERO" POSITION.
4. ONE OR MORE RESISTORS (R14, R39 OR R40) MAY BE SHORTED OUT TO ADJUST HIGH VOLTAGE.
5. IN EARLIER PRODUCTION, C9 WAS .01 AND C12 WAS .005.

PRECISION RADIATION INSTRUMENTS, INC.

MODEL IIIC CUSTOM
"SCINTILLATOR"

DRAWN BY HRD.
CHECKED BY
MARCH 1955

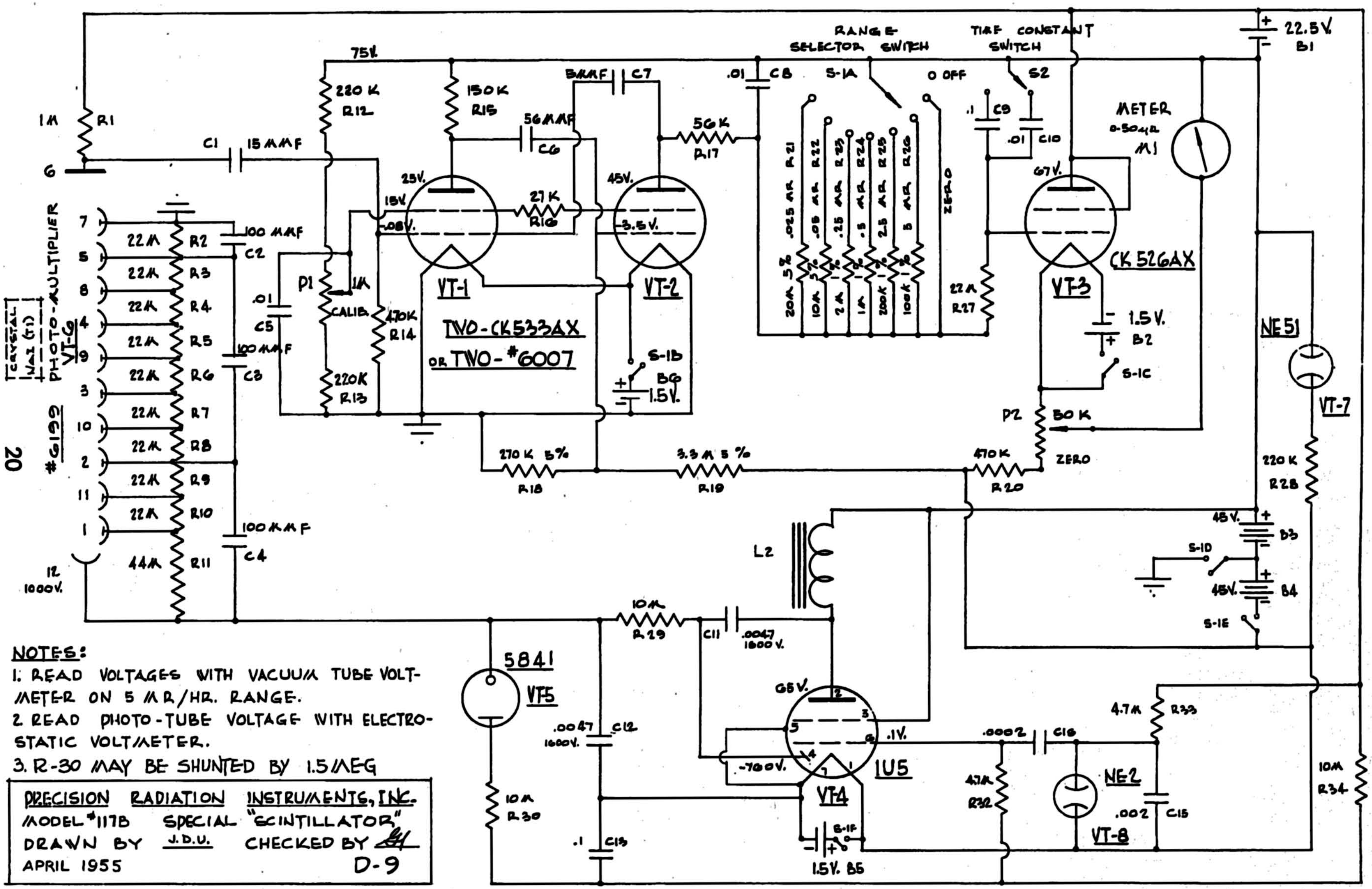

NOTES:

1. READ VOLTAGES WITH VACUUM TUBE VOLTMETER ON 5 MR/HR. RANGE.
2. READ PHOTO-TUBE VOLTAGE WITH ELECTROSTATIC VOLTMETER.
3. R-30 MAY BE SHUNTED BY 1.5MEG

PRECISION RADIATION INSTRUMENTS, INC.
MODEL #117B SPECIAL "SCINTILLATOR"
DRAWN BY J.D.U. CHECKED BY
APRIL 1955 D-9

MAKE NOTES HERE

MAKE NOTES HERE

Litho in U.S.A.


NOTE: TWO 22½ V. BATTERIES MOUNTED BEHIND 1½ V. CELLS.
CAUTION TURN SWITCH OFF BEFORE DISCONNECTING BATTERIES
(−)
(−)

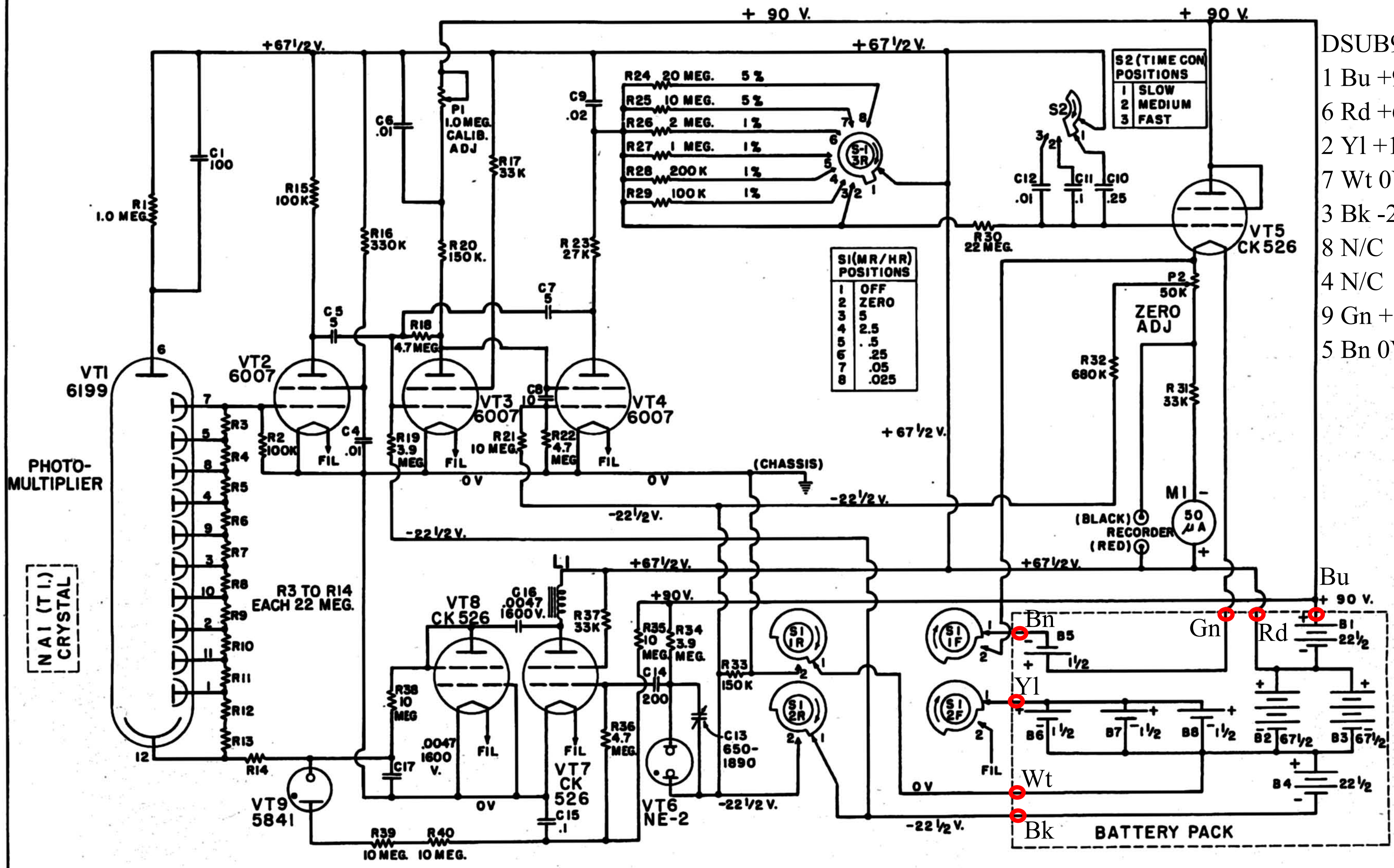

DSUB9-M
1 Bu +90
6 Rd +67.5
2 Yl +1.5
7 Wt 0V
3 Bk -22.5
8 N/C
4 N/C
9 Gn +1.5
5 Bn 0V

NOTES:-

1. ALL SWITCHES SEEN FROM KNOB END, DECK "1F" IS FRONT (KNOB) SIDE OF DECK NEAREST KNOB, ETC.
2. ALL CAPACITORS GREATER THAN 1 ARE IN μμF ALL LESS THAN 1 IN μ F.D.
3. VOLTAGES SHOWN TO CHASSIS WITH S1 IN "ZERO" POSITION.
4. ONE OR MORE RESISTORS (R14, R39 OR R40) MAY BE SHORTED OUT TO ADJUST HIGH VOLTAGE.
5. IN EARLIER PRODUCTION, C9 WAS .01 AND C12 WAS .005.

PRECISION RADIATION INSTRUMENTS, INC.
MODEL 111B DE LUXE
"SCINTILLATOR"
DRAWN BY HRO.
CHECKED BY GH
MARCH 1955