NOTES: UNLESS OTHERWISE SPECIFIED

REVISIONS			
REV	DESCRIPTION	DATE	APPROVED

THIS PINOUT IS THE SAME AS THE ICD MODULE ITSELF. THIS IS THE OPPOSITE OF THE WAY IT IS DONE ON THE MICROCHIP DEMO BOARD. THE CABLE FROM TES IS PINNED 1-1 VS THE CABLE FROM MICRO-CHIP WHICH IS PINNED 1-6.

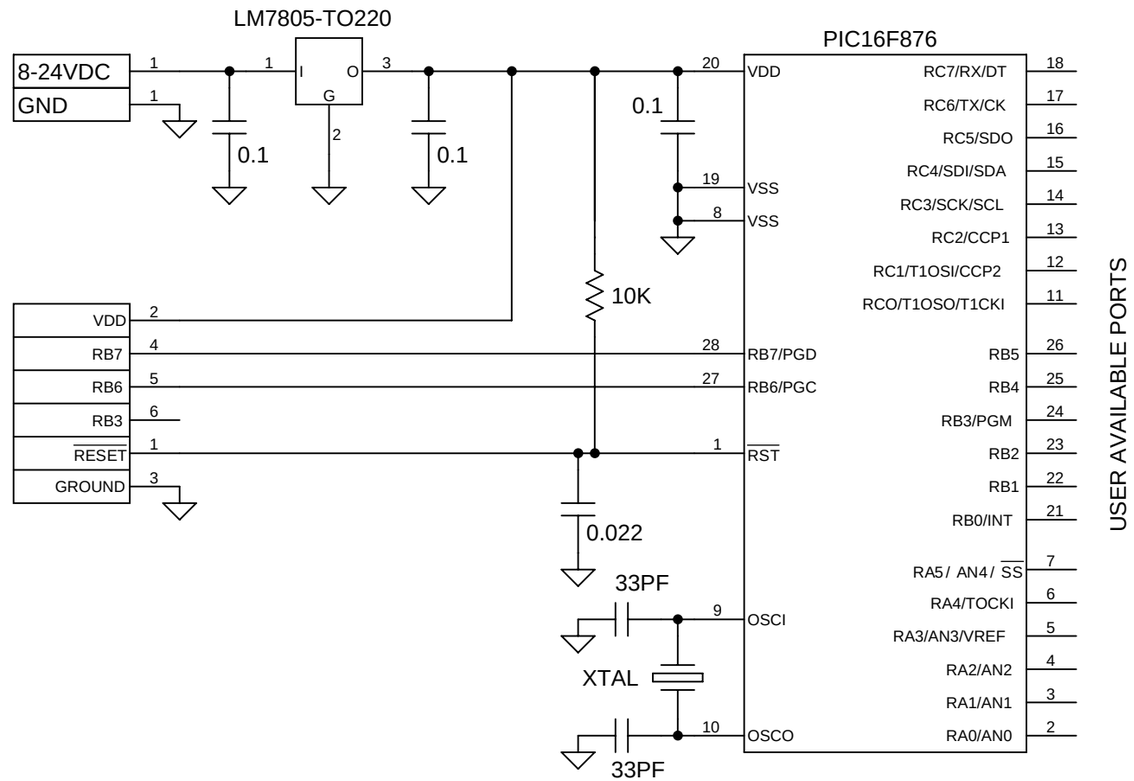

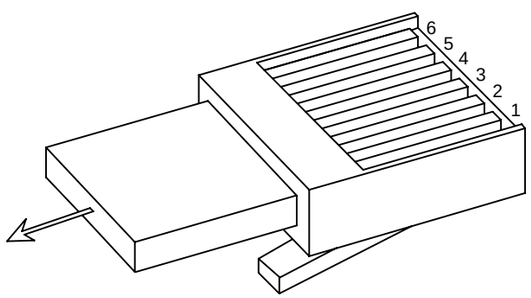

CAD GENERATED DRAWING, DO NOT MANUALLY CHANGE

ITEM NO.	QTY REQD	CAGE CODE	PART OR IDENTIFYING NO.	DESCRIPTION	MATERIAL SPECIFICATION

PARTS LIST

NEXT ASSY	USED ON

APPLICATION
UNLESS OTHERWISE SPECIFIED IN CONTRACT, APPLICATION DATA IS ONLY FOR

UNLESS OTHERWISE SPECIFIED
DIMENSIONS ARE IN INCHES
TOLERANCES ARE:
FRACTIONS ± DECIMALS .XX ±.03 .XXX ±.010 ANGLES 0 30' ±
INTERPRET DRAWING PER DOD-STD-100
INTERPRET DIMENSIONS AND TOLERANCES PER ANSI Y14.5M-1982
REMOVE ALL BURRS AND SHARP EDGES .03R MAX
ABBREVIATIONS PER MIL-STD-12
SURFACE ROUGHNESS ✓
HOLED TOLERANCES PER AND10387

DO NOT SCALE DRAWING

CONTACT NO.

APPROVALS	DATE
DRAWN	
CHECKED	
ENGINEER	
PROJ ENGR	
APPROVED	
QA	

TITLE
TYPICAL MINIMUM ICD INTERFACE
R/C RESET NETWORK - CRYSTAL

SIZE	FSCM NO.	DWG. NO.	REV.
B		0004.S01	-

SCALE NONE | Mon Mar 17 2003 | SHEET 1 OF 1