MODE 9: LINE FREQUENCY CLOCK

(Bottom View)

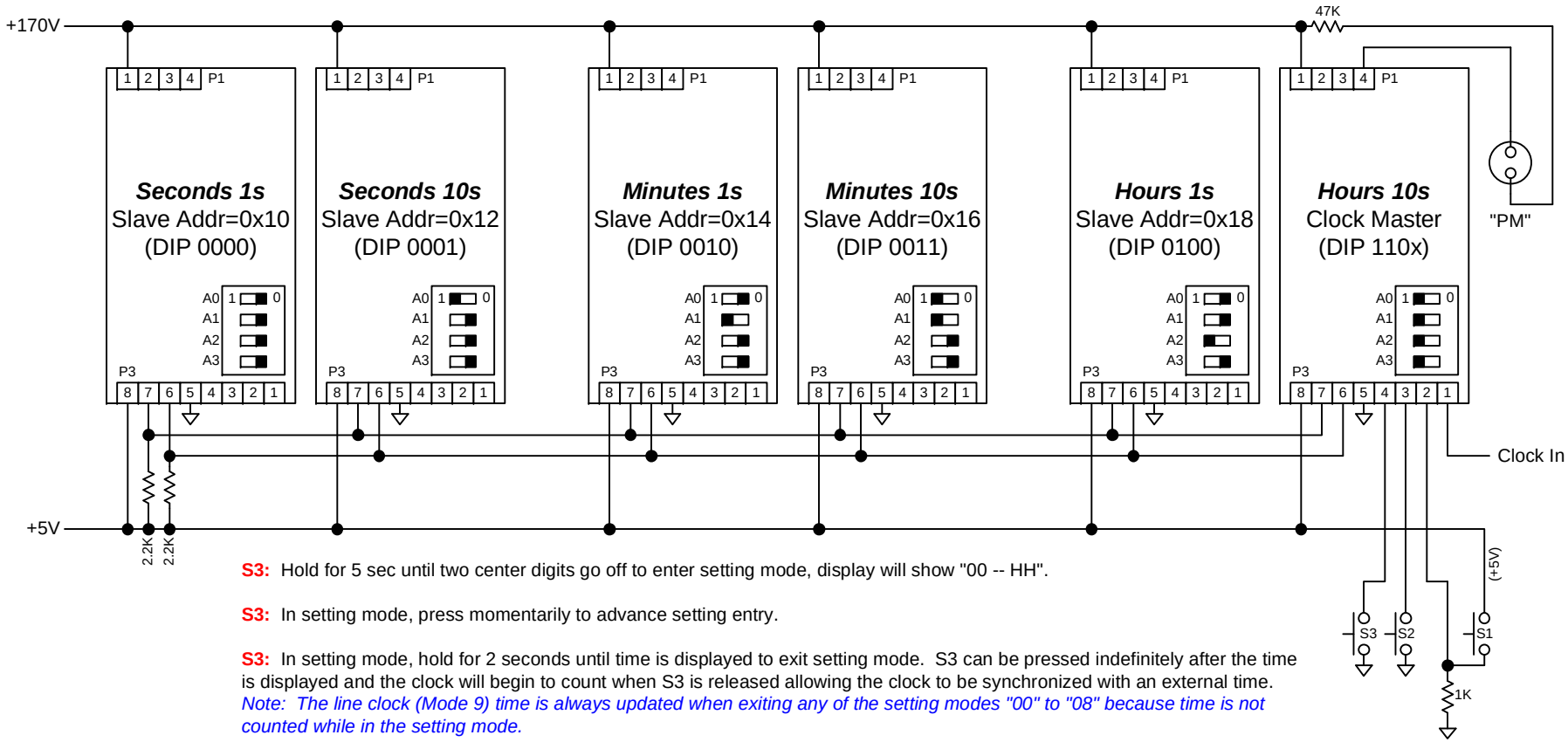

S3: Hold for 5 sec until two center digits go off to enter setting mode, display will show "00 -- HH".

S3: In setting mode, press momentarily to advance setting entry.

S3: In setting mode, hold for 2 seconds until time is displayed to exit setting mode. S3 can be pressed indefinitely after the time is displayed and the clock will begin to count when S3 is released allowing the clock to be synchronized with an external time. *Note: The line clock (Mode 9) time is always updated when exiting any of the setting modes "00" to "08" because time is not counted while in the setting mode.*

S2: In setting mode advances 10s digit of current selection.

S1: In setting mode advances 1s digit of current selection.

S2/S1: If current setting is a choice list such as the line clock selection, both switches advance through the list in the same direction.

S2/S1: If the current setting is "08", or dimming, S2 increases intensity in 5% steps up to 100% and S1 decreases intensity in 5% steps down to 5%. Note that the "88" at the right is to show what the display will look like when setting mode is exited, the "08" at the left will always be at 100%